DATA SHEET







DESCRIPTION

PVC corner profile to be stuck
To protect wall angles from impacts from trolleys or hospital beds
Drilled - countersunk: to be screwed
to be glued on a clean surface (no dust, no grease)
Invisible fixing with clips

USE

For overlapping a wall covering or a painted wall.

REFERENCE

Ref : 468005

MATERIAL

Highly shock-resistant PVC profile - Fire rating: Bs2 d0
Smooth surface
REACH compliant

The information contained in this document is provided for information purposes. Romus cannot be held liable for this information. The user or specifier will check the compatibility of the product technical data with the actual situation. Romus reserves the right to modify all or part of this document without prior notice.

Architect :
Project :
Email :
Tel :

Distributor : Tel : Email :

DATA SHEET

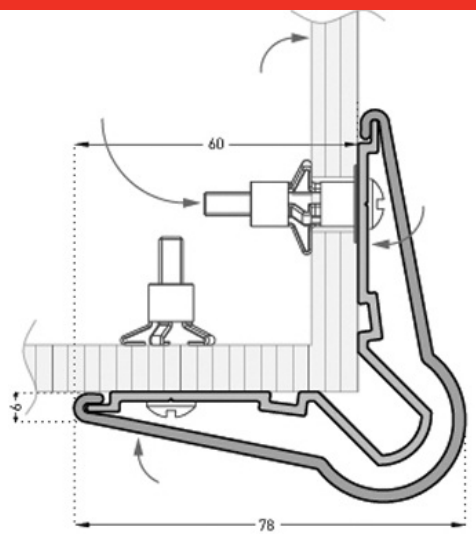

> MAINTENANCE

Use standard cleaners (neutral detergents)

The information contained in this document is provided for information purposes. Romus cannot be held liable for this information. The user or specifier will check the compatibility of the product technical data with the actual situation. Romus reserves the right to modify all or part of this document without prior notice.

Architect :
Project :
Email :
Tel :
Distributor : Tel : Email :